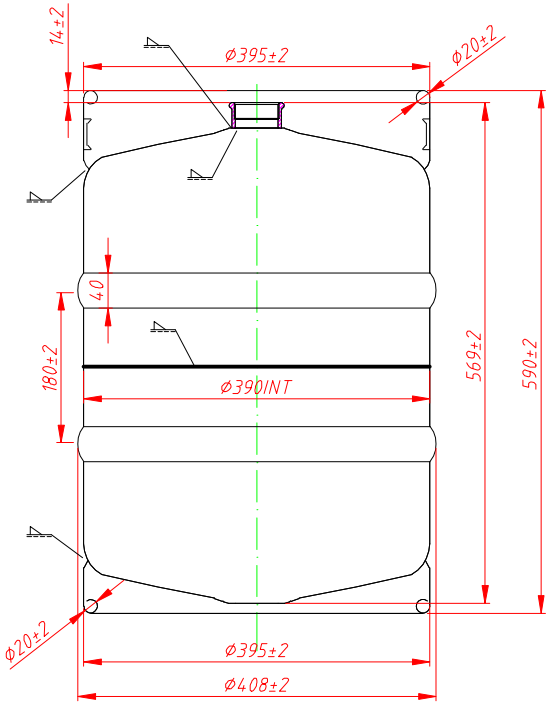

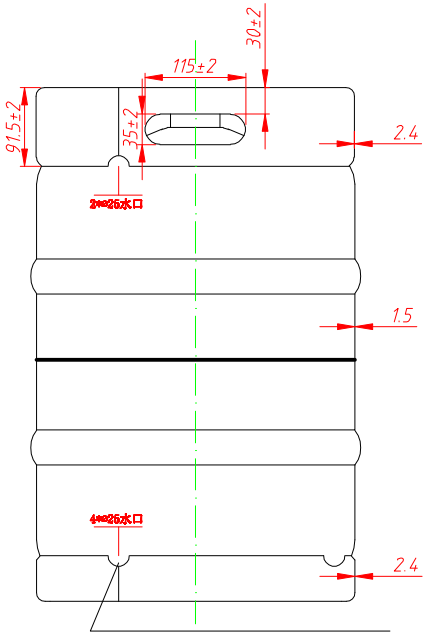

4 DRAIN HOLES R12 90° DISPLACED

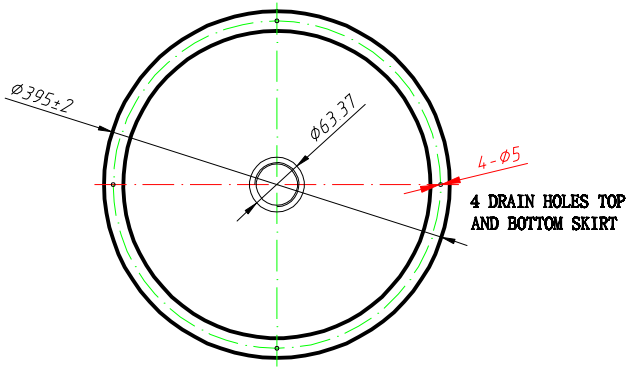

4 DRAIN HOLES TOP
AND BOTTOM SKIRT

CAPACITY: 58.6+0.1~0.4LTS
WEIGHT: 13.8±5%KGS
MATERIAL: SUS304-2B
KEG PICKLED AND PASSIVATED
NECK: DROP IN
USAGE PRESSURE: ≤0.3MPa(45PSI)
TEST PRESSURE: ≤0.6MPa(85PSI)

Standard Kegs LLC
info@standardkegs.com
www.standardkegs.com

1/2 USA			
Unit	MM	Weight	13.8±5%Kg
Proportion	1:6	Volume	58.6L
Material	SUS 304 / 1.4301		